© 2010 Hasbro.

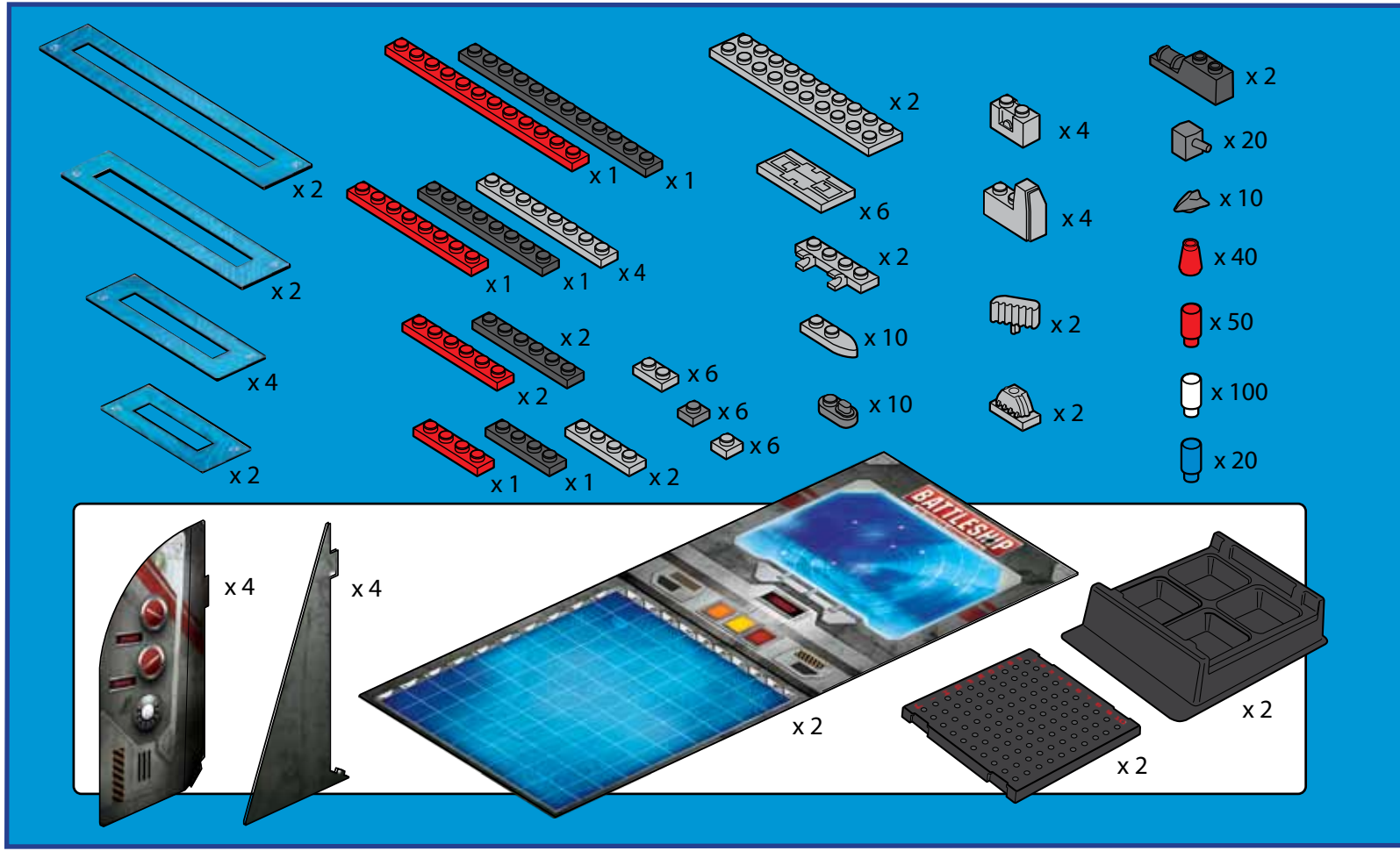
x 2
x 2
x 4
x 2
x 1
x 1
x 1
x 1
x 4
x 2
x 2
x 1
x 1
x 2
x 6
x 6
x 6
x 2
x 6
x 2
x 10
x 10
x 4
x 4
x 2
x 2
x 2
x 20
x 10
x 40
x 50
x 100
x 20
x 4
x 4
BATTLESHIP
x 2
x 2
x 2

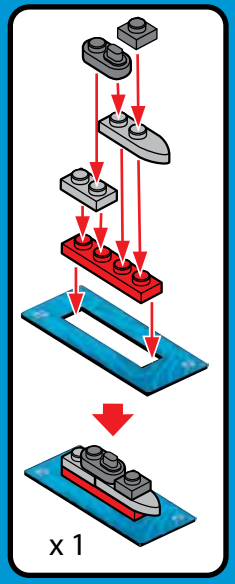
x 1

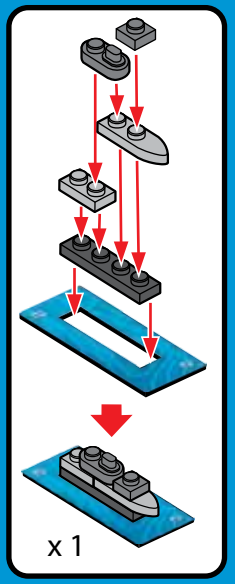
x 1

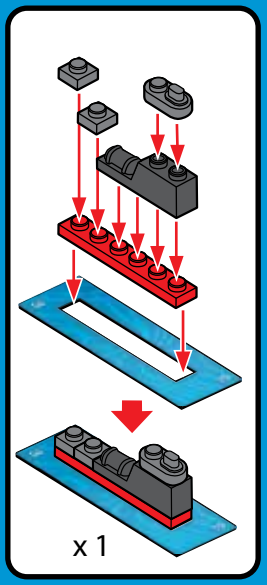
x 1

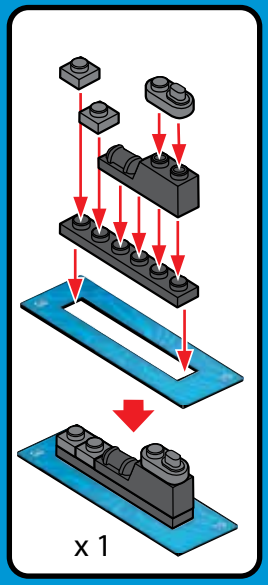
x 1

2

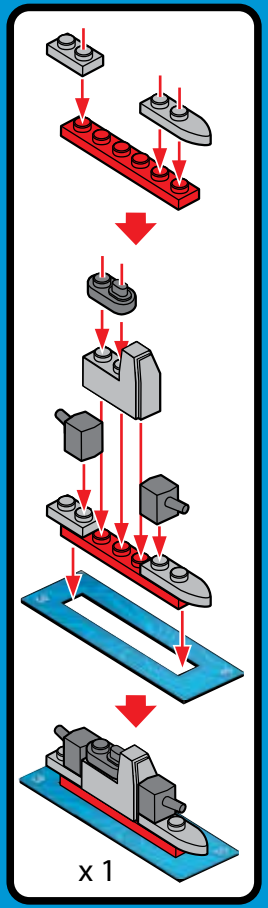

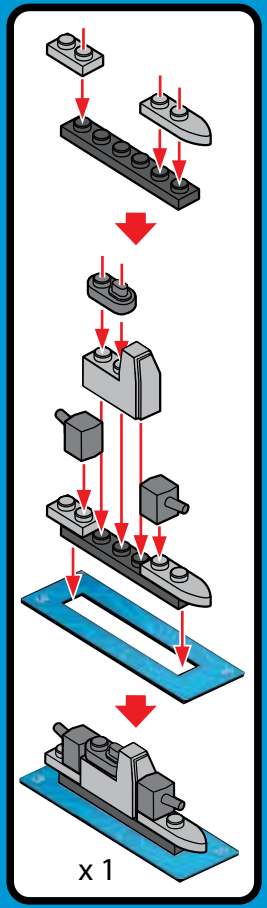

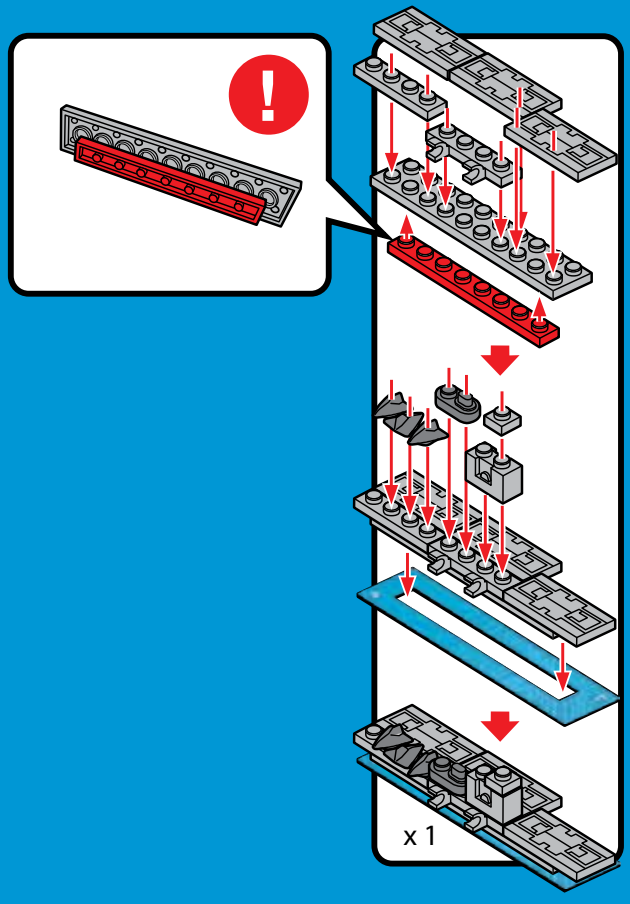
x 1

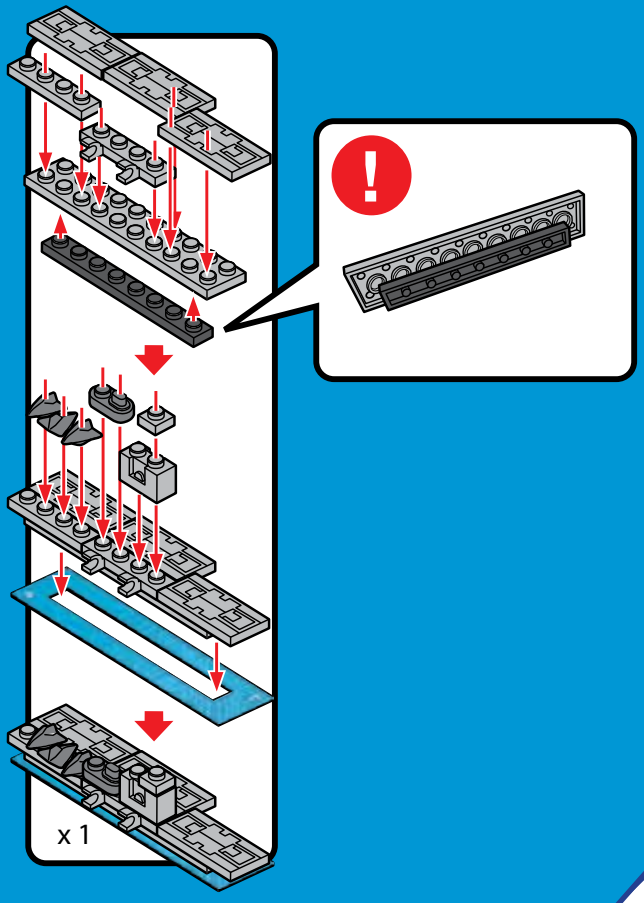
x 1

4

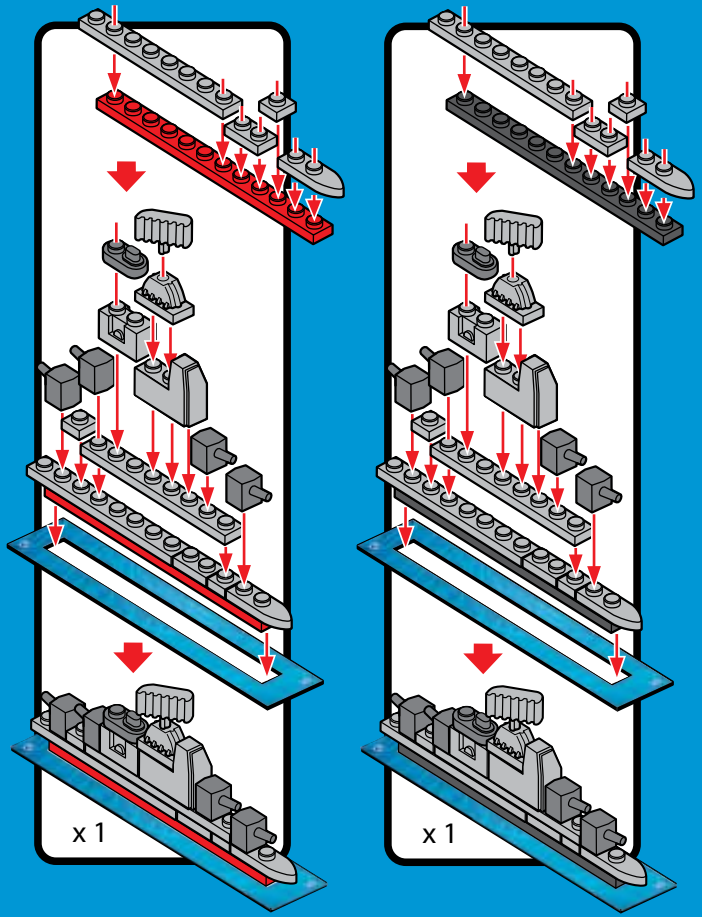

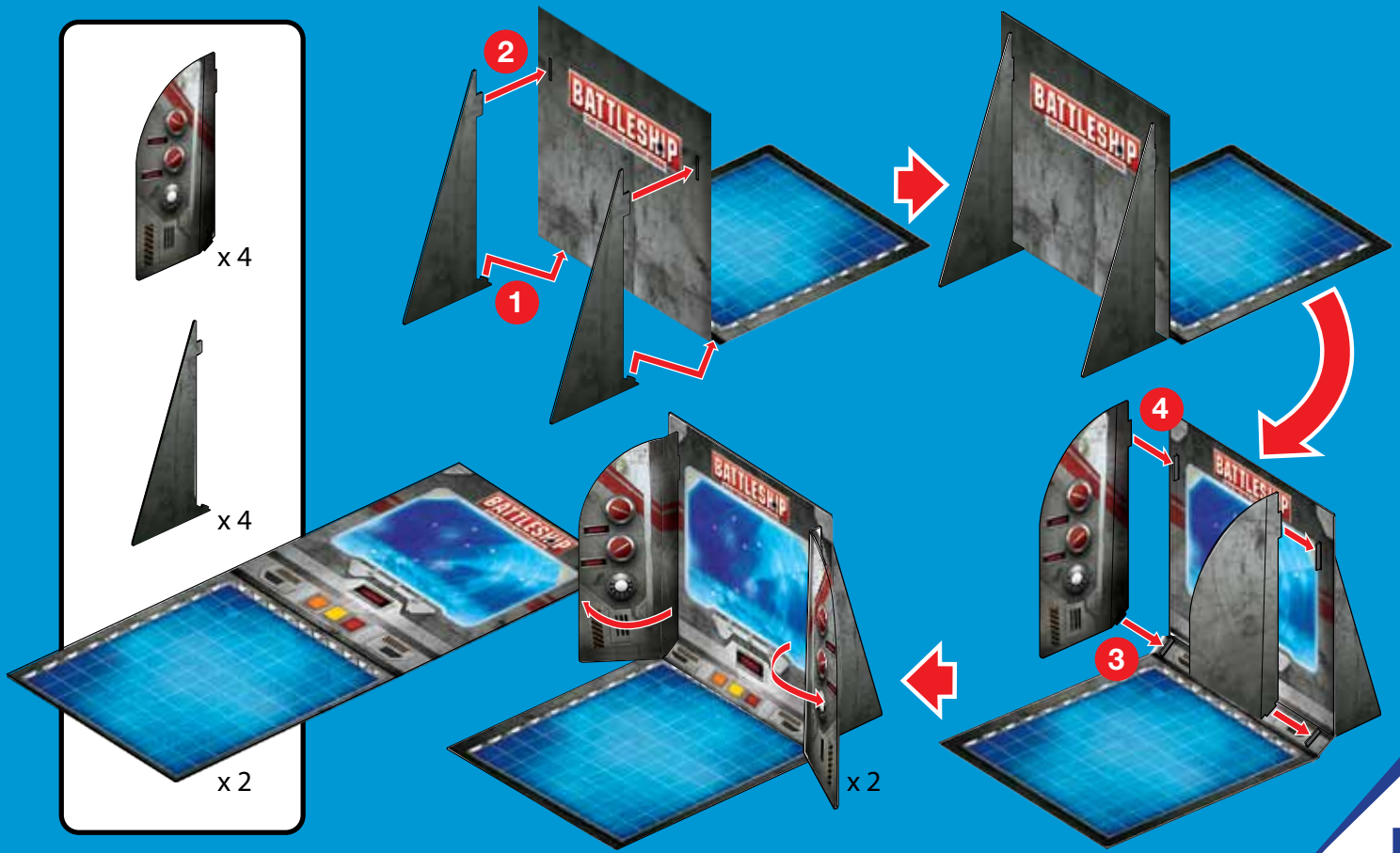
x 4
x 4
x 2
1
2
3
4
BATTLESHIP
x 2

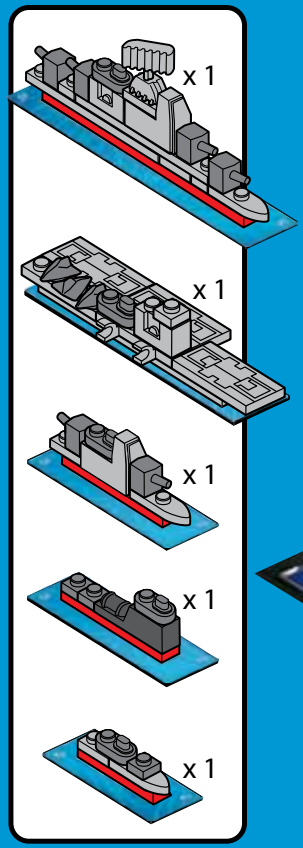
x 1
x 1
x 1
x 1
x 1

BATTLESHIP
BATTLESHIP

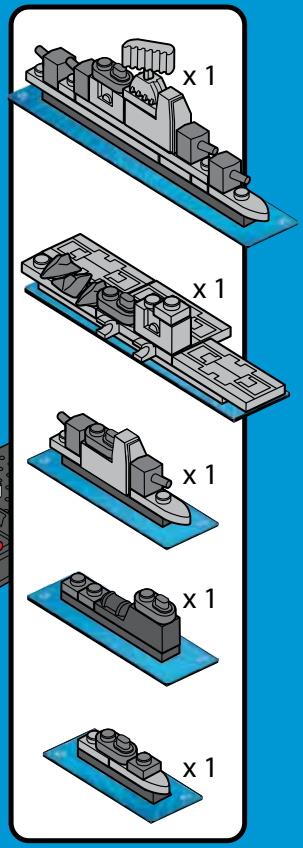
x 1
x 1
x 1
x 1
x 1