TRANSFORMERS®* DARK OF THE MOON™*

AUTOBOT®*

ADVANCED

BUMBLEBEE™* LEVEL: 1 2 3

NOTE: Some parts are made to detach if excessive force is applied and are designed to be reattached if separation occurs. Adult supervision may be necessary for younger children.

WARNING:

CHOKING HAZARD-Small parts. Not for children under 3 years.

AGES 5+

28751/28749 ASST.

CHANGING TO VEHICLE

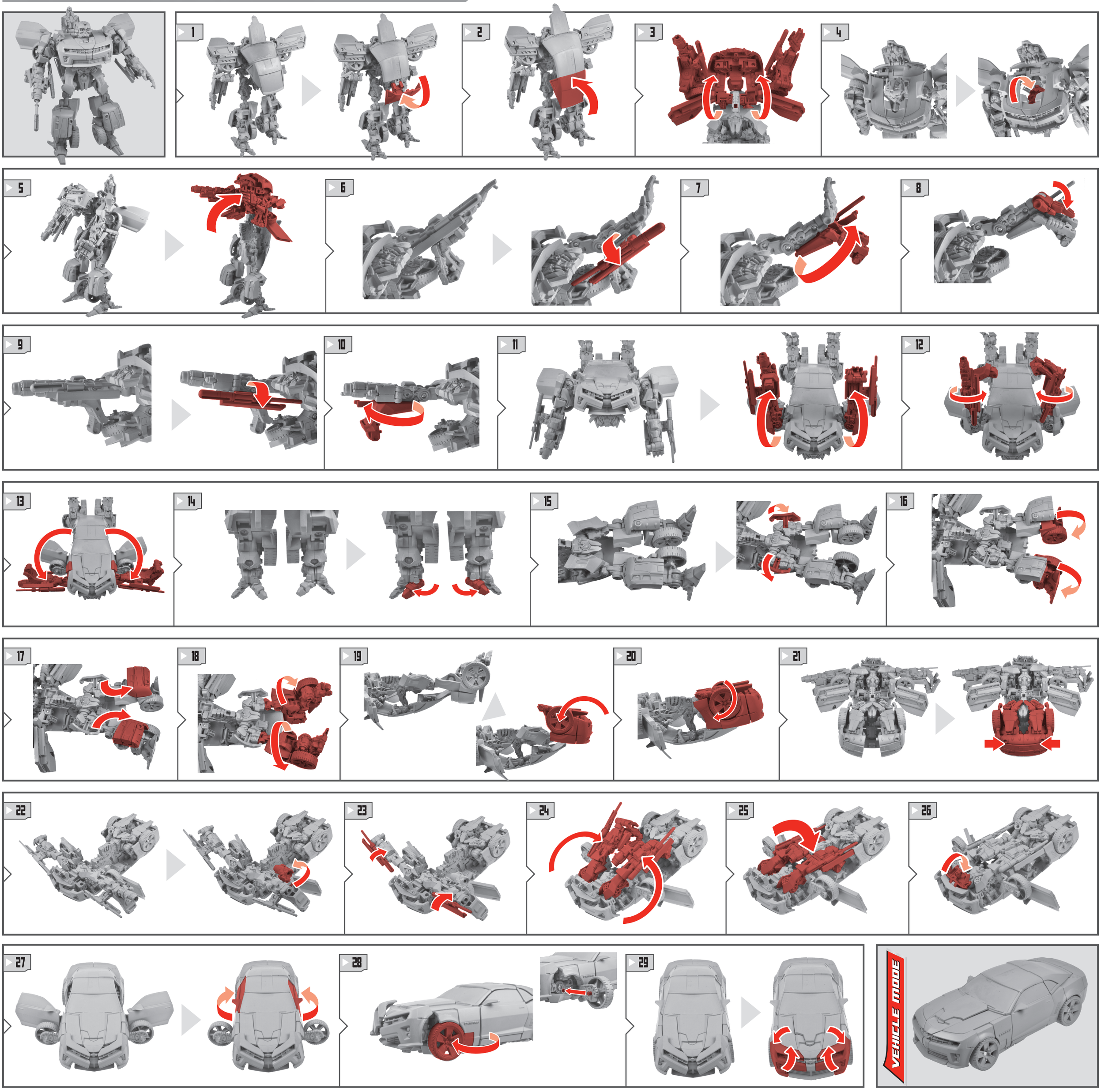

CHANGING TO ROBOT

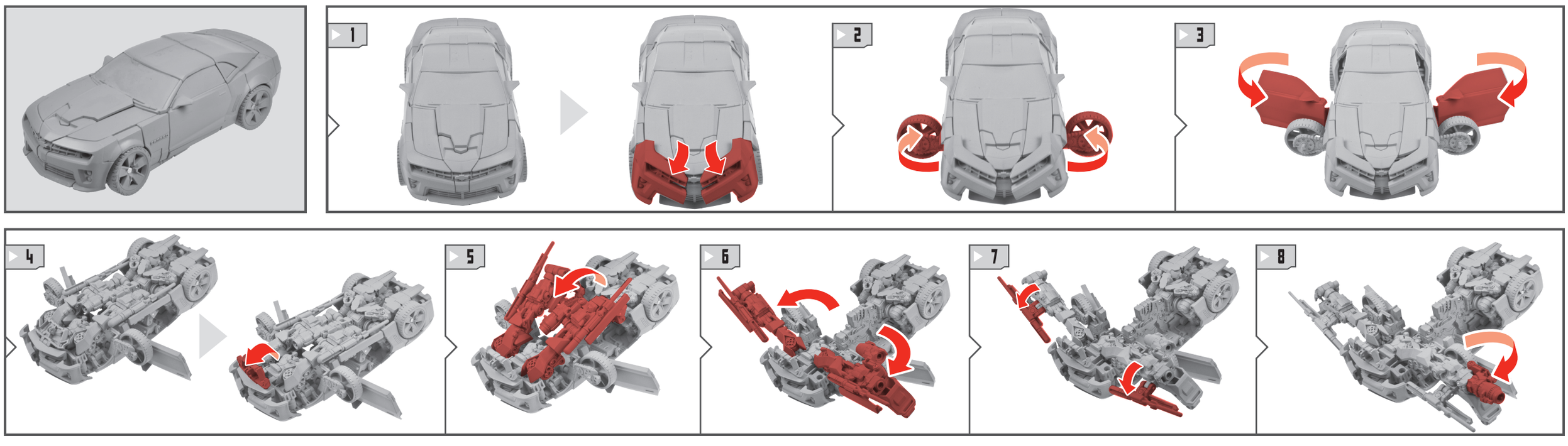

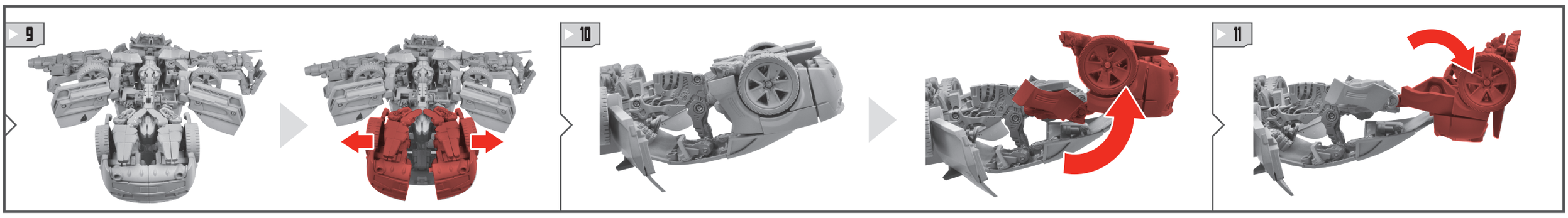

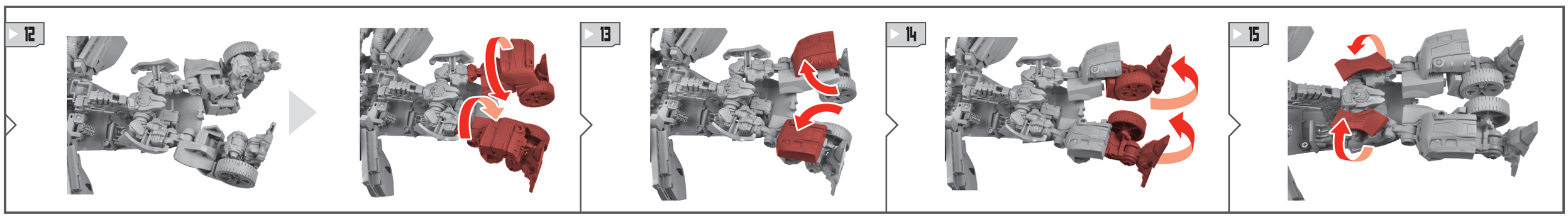

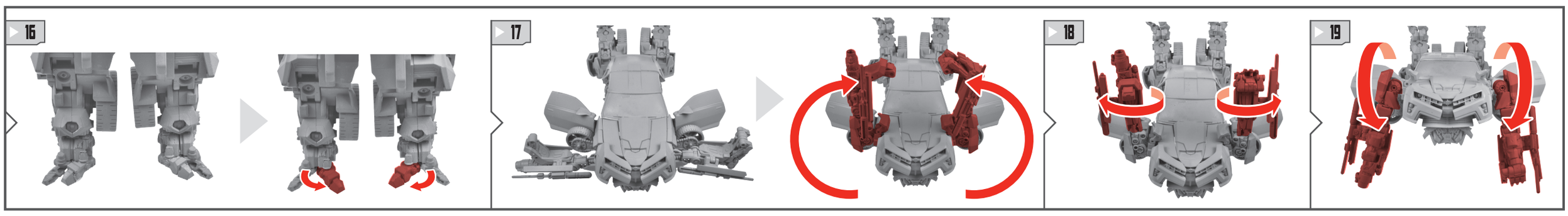

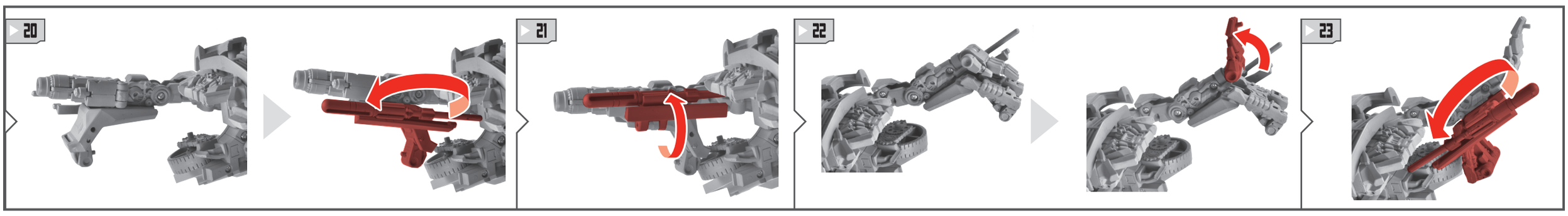

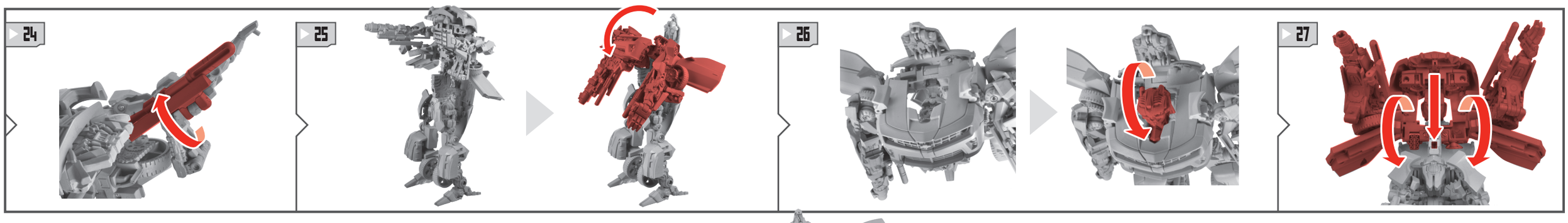

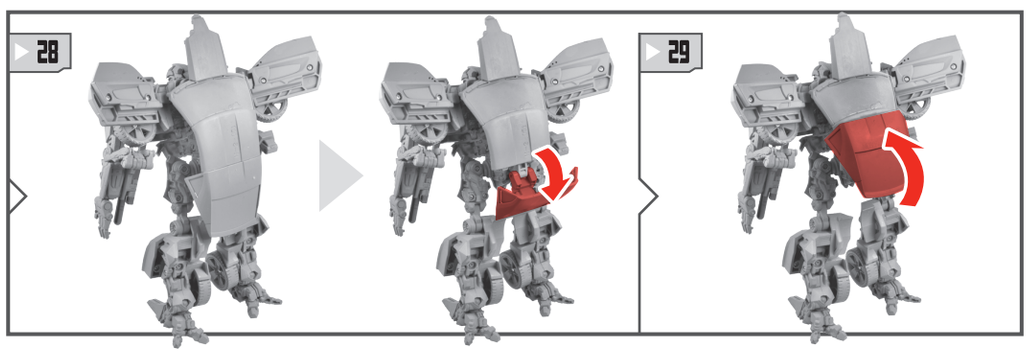

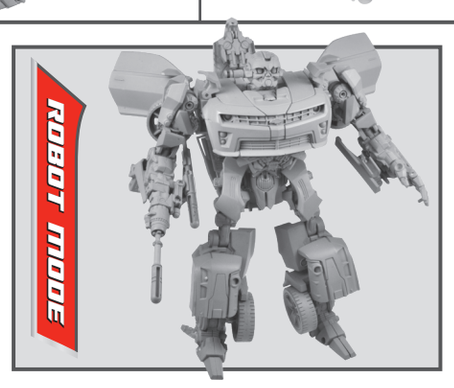

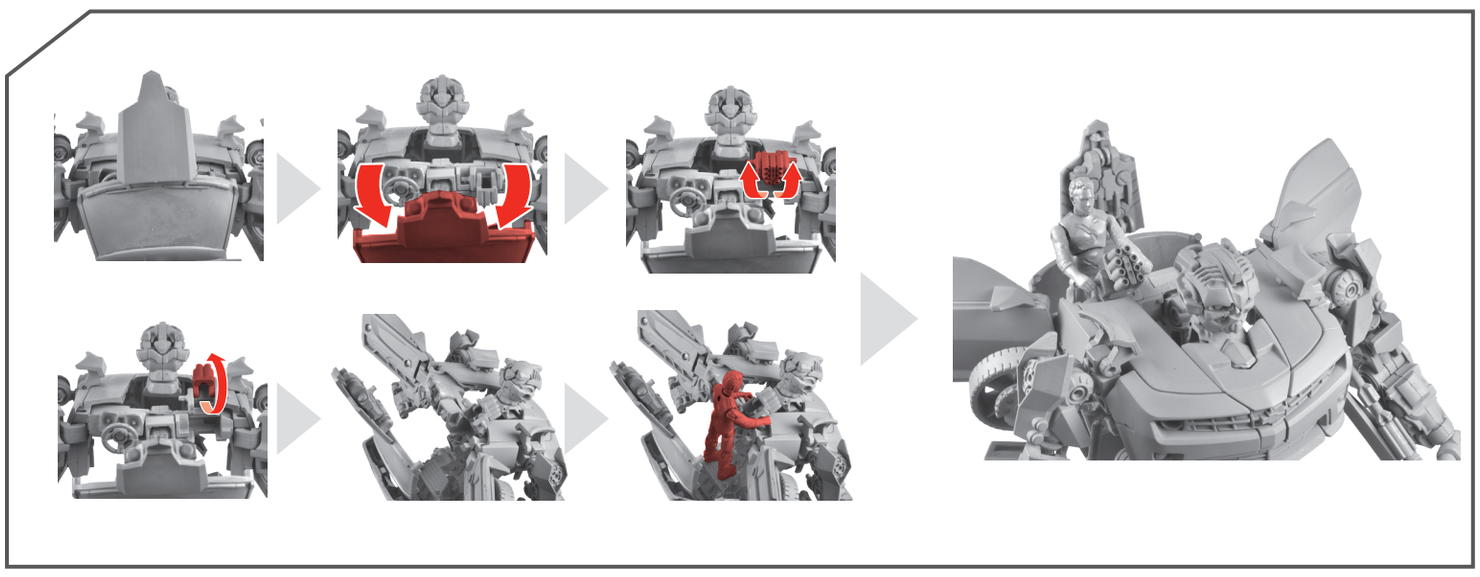

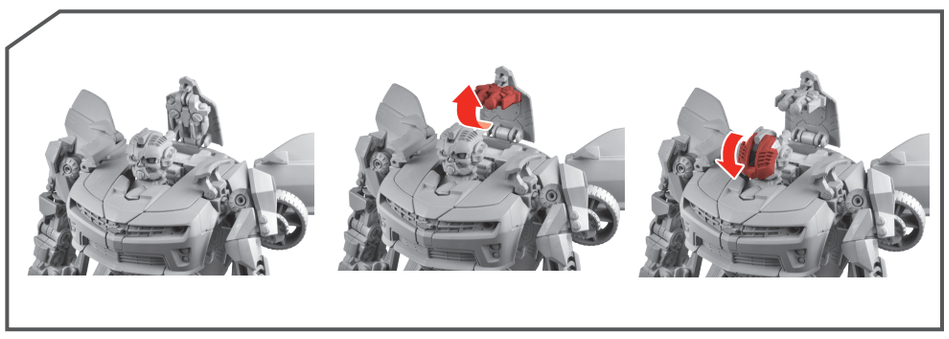

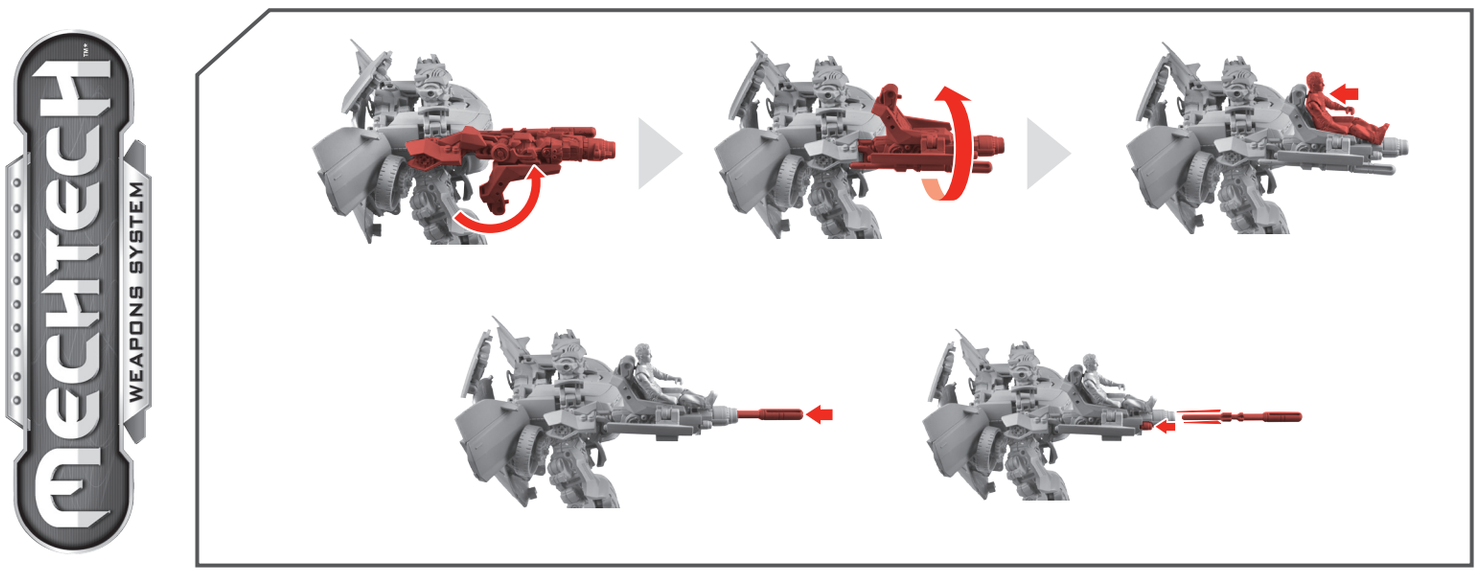

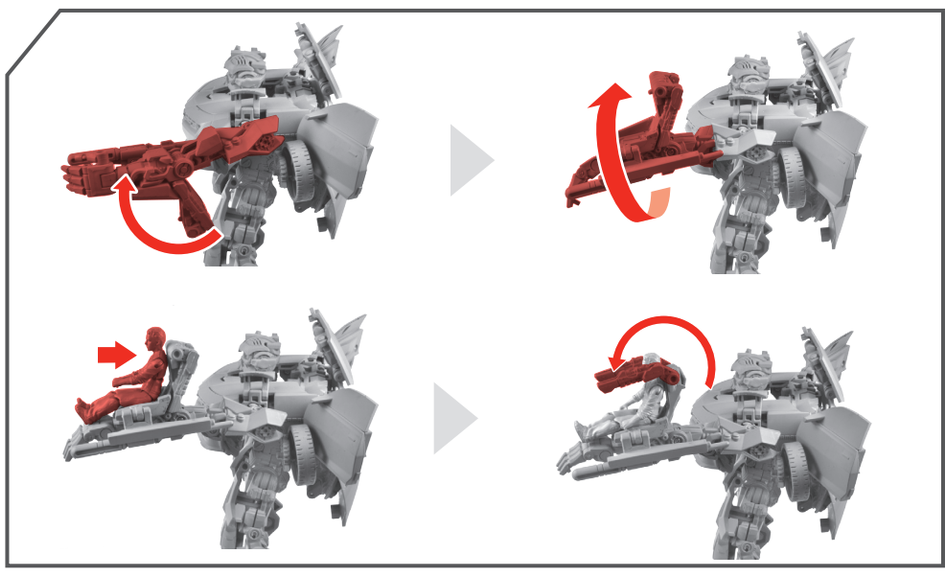

Retain instructions for future reference.

Product and colors may vary. Some poses may require hand support.

© 2010 Paramount Pictures Corporation.
Manufactured under license from TOMY Company, Ltd.
®* and/or TM* & © 2010 Hasbro. All Rights Reserved. TM & ® denote U.S. Trademarks.

Camaro and all related Emblems and body designs are General Motors Trademarks used under license to Hasbro, Inc.

P/N 7149180000

TRANSFORMERS.COM/INSTRUCTIONS