81 216

Ages 5 and up.

SAND STRIKER™ VEHICLE

Instruction Sheet

⚠ WARNING:

'OKING HAZARD-Small parts.
.. for children under 3 years.

1. Apply labels to *unassembled* parts, using numbers on the label sheet and these illustrations as a guide.

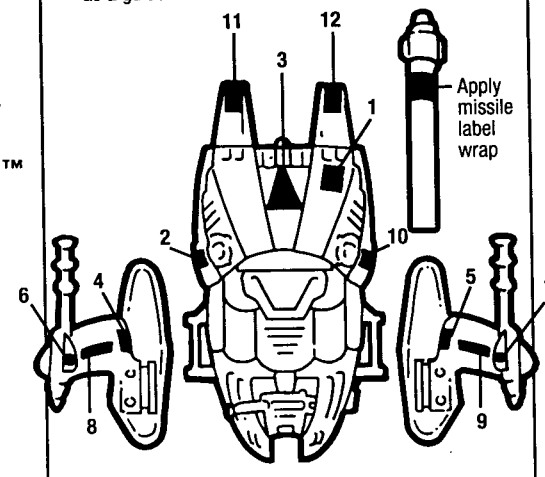

2. Snap treads and front wheels onto both sides of vehicle body as shown.

ONE-TIME ASSEMBLY
Once assembled cannot be taken apart

FRONT WHEELS

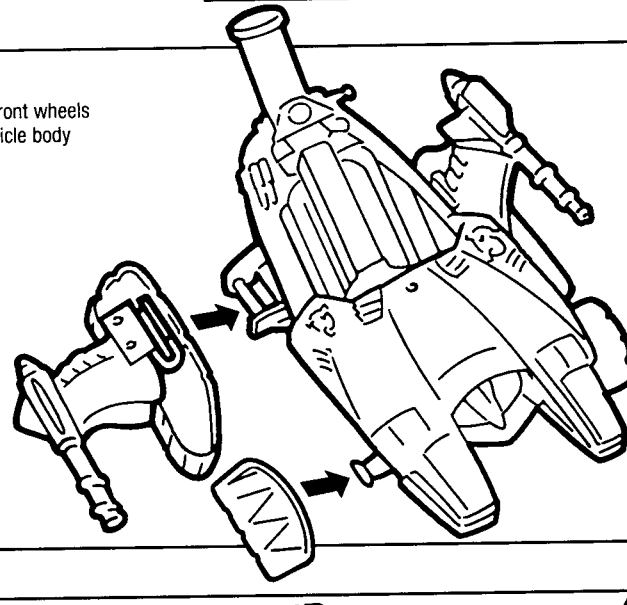

3. Insert weapon with pin into top of vehicle as shown.

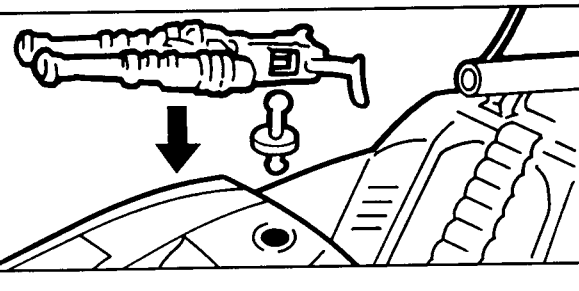

Kenner

© 1995 HASBRO, INC., Pawtucket, Rhode Island 02862. All Rights Reserved.
KENNER® is a trademark of Tonka Corporation, a subsidiary of Hasbro, Inc.

52165500
MADE IN CHINA

4. Snap plunger into back of vehicle, plunger snaps into place.

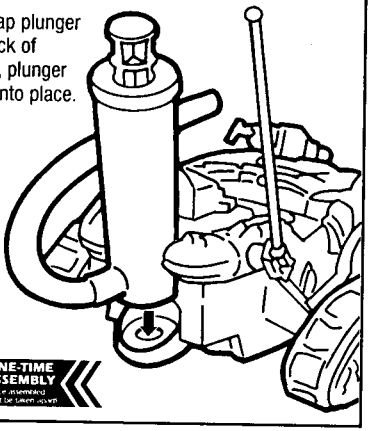

ONE-TIME ASSEMBLY
Once assembled cannot be taken apart.

5. Snap cannon tube onto pivot.

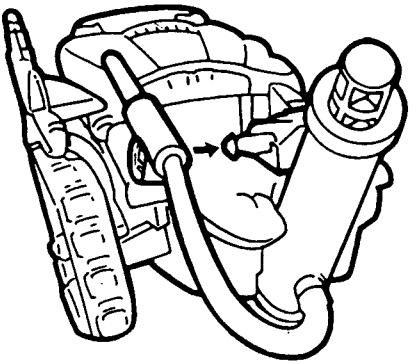

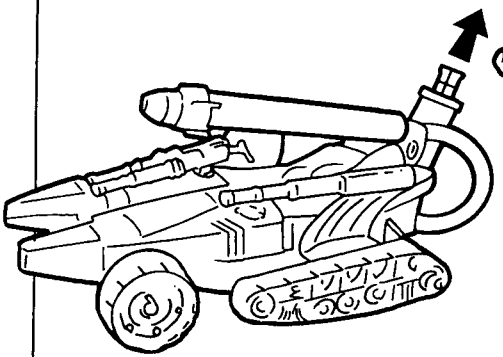

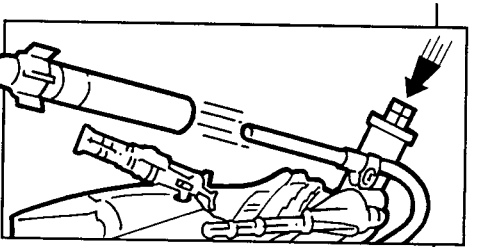

6. With missile loaded, slowly pull up plunger handle, aim missile launcher and quickly push down plunger handle.

7. To convert to hovercraft, rotate tread and wheels down as shown.

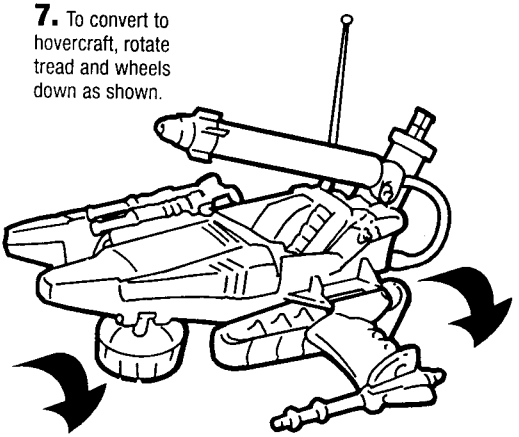
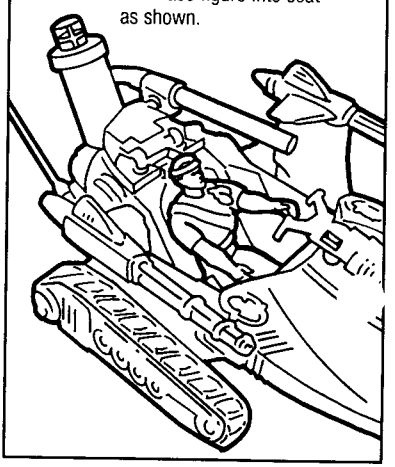
8. Place figure into seat as shown.