FEATURES:

DOORS: Press button to open gunship doors.

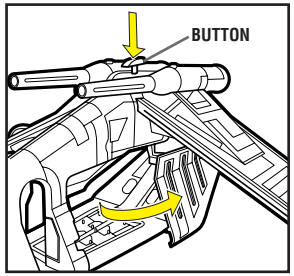

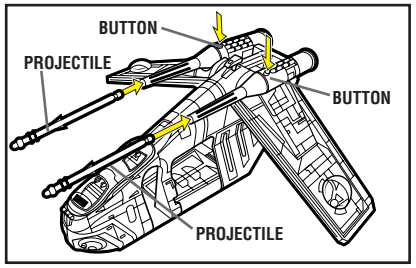

"LASER" CANNONS: Insert projectiles into cannons. Press button on each cannon to launch projectiles.

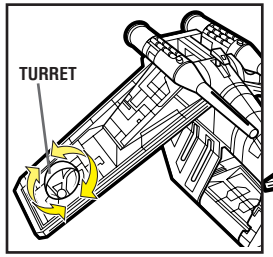

WING BALL TURRETS: Rotate turrets to activate blaster sounds.

GRAPPLING HOOK: Unwind grappling hook to tow other vehicles (vehicles not included).

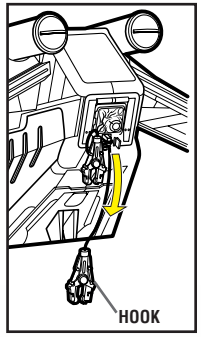

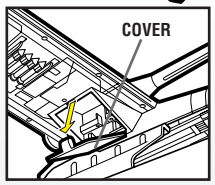

STORAGE BAYS: Covers under wings open to reveal storage bays.

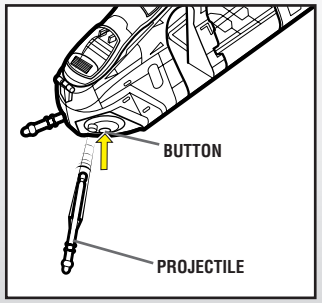

CHIN GUNS: Insert projectiles. Press buttons to fire projectiles.

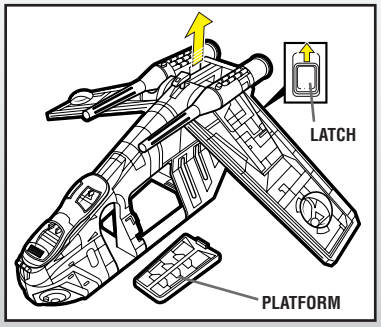

LANDING BASE: Place gunship on a landing surface. To deploy troop landing platform, slide latch underneath ship, then lift the gunship straight up.

Product and colors may vary.
© 2005 Lucasfilm Ltd. & ® or TM where indicated. All rights reserved.
Used under authorization.
®* and/or ™* & © 2005 Hasbro.
® denotes Reg. U.S. Pat. & TM Office.

P/N 6444120000

THE OFFICIAL STAR WARS FAN CLUB
starwars.com

STAR WARS®
REVENGE OF THE SITH™

WARNING:
CHOKING HAZARD-Small parts. Not for children under 3 years.

AGES 4+

85458/85414 Asst.

REPUBLIC GUNSHIP™

Assembly required. No tools needed.

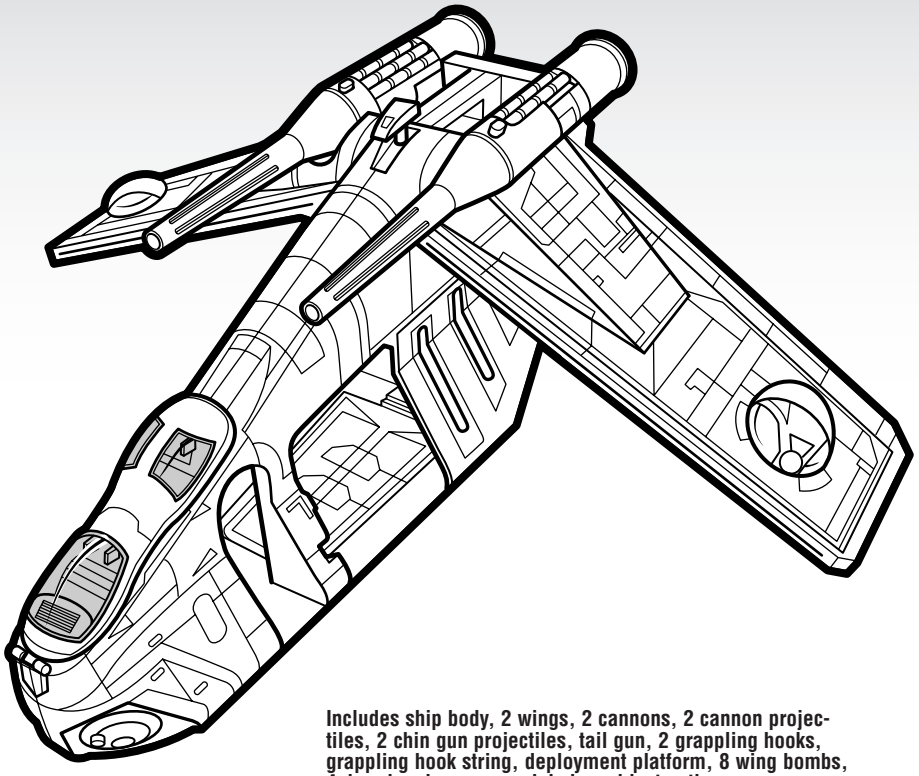

Includes ship body, 2 wings, 2 cannons, 2 cannon projectiles, 2 chin gun projectiles, tail gun, 2 grappling hooks, grappling hook string, deployment platform, 8 wing bombs, 4 door bombs, canopy, labels and instructions.

ASSEMBLY:

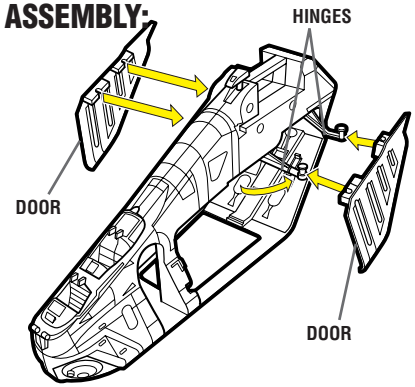

❶ If doors become dis-attached from toy, reattach by snapping knobs on door hinges into slots in doors.

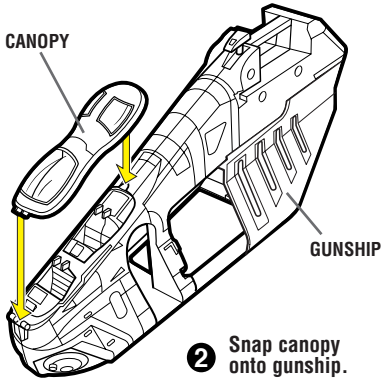

❷ Snap canopy onto gunship.

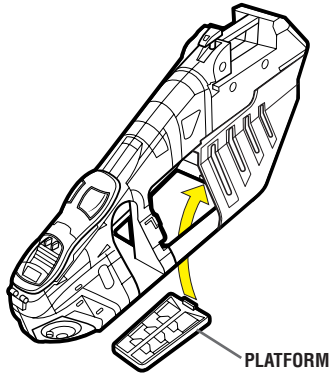

❸ From bottom of ship body, snap deployment platform into base of body.

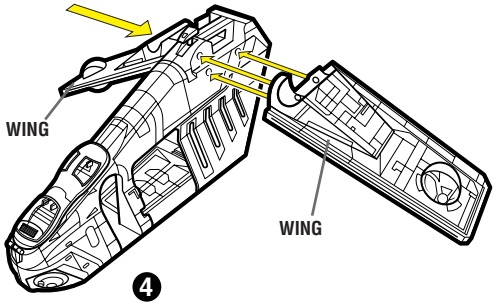

❹ Snap wings onto ship body.

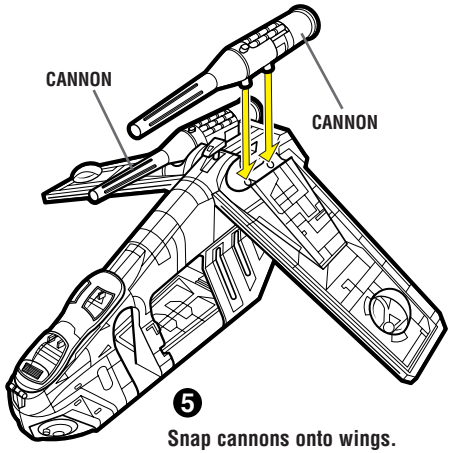

❺ Snap cannons onto wings.

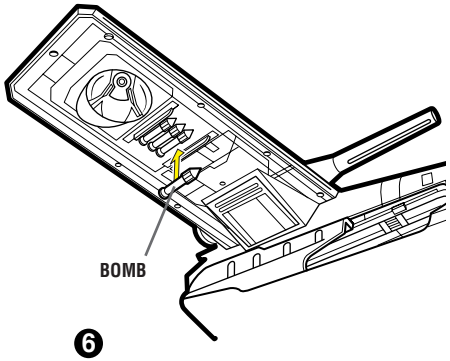

❻ Snap under-wing bombs to bomb holders.

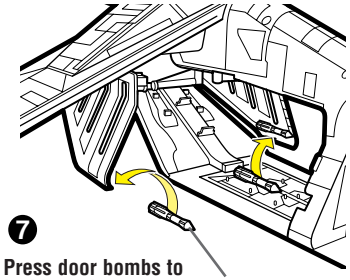

❼ Press door bombs to inside of doors.

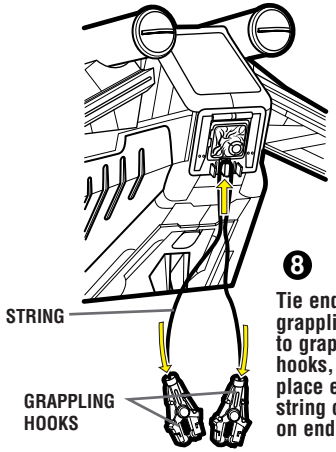

❽ Tie ends of grappling string to grappling hooks, then place end of string onto hook on end of ship.

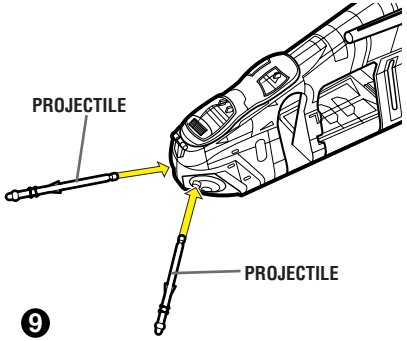

❾ Push chin gun projectiles into chin guns.

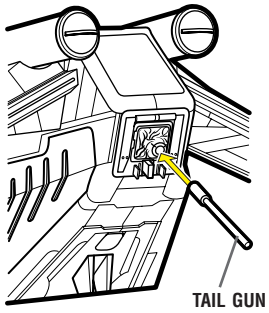

❿ Snap tail gun into socket.
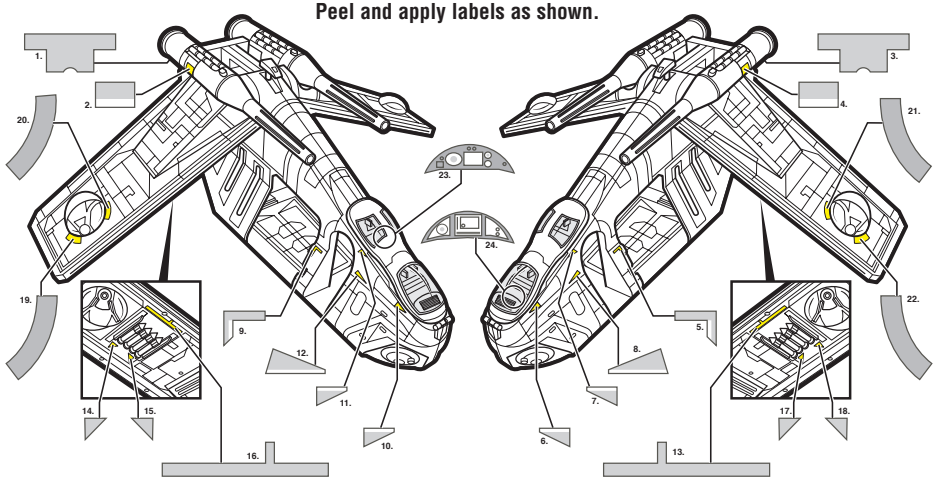
Peel and apply labels as shown.