TRANSFORMERS ALTERNATORS®

ROBOTS IN DISGUISE®

INSTRUCTIONS

NOTE: *Some parts are made to detach if excessive force is applied and are designed to be reattached if separation occurs. Adult supervision may be necessary for younger children.*

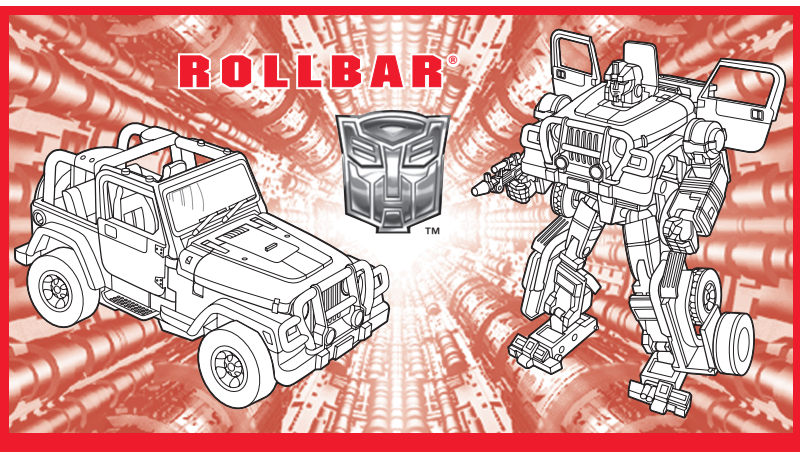

AGES 5+

81337/81328 Asst.

⚠ WARNING:

CHOKING HAZARD-Small parts.
Not for children under 3 years.

transformers.com

P/N 6540340000

CHANGING TO ROBOT

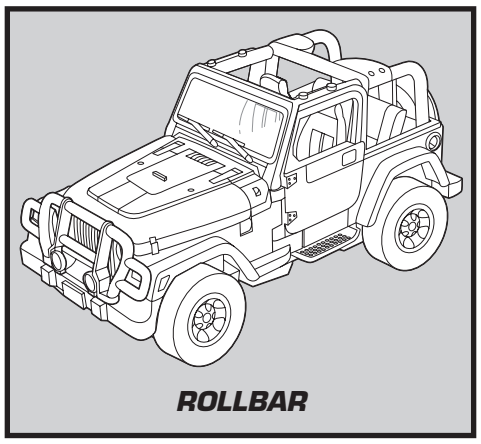

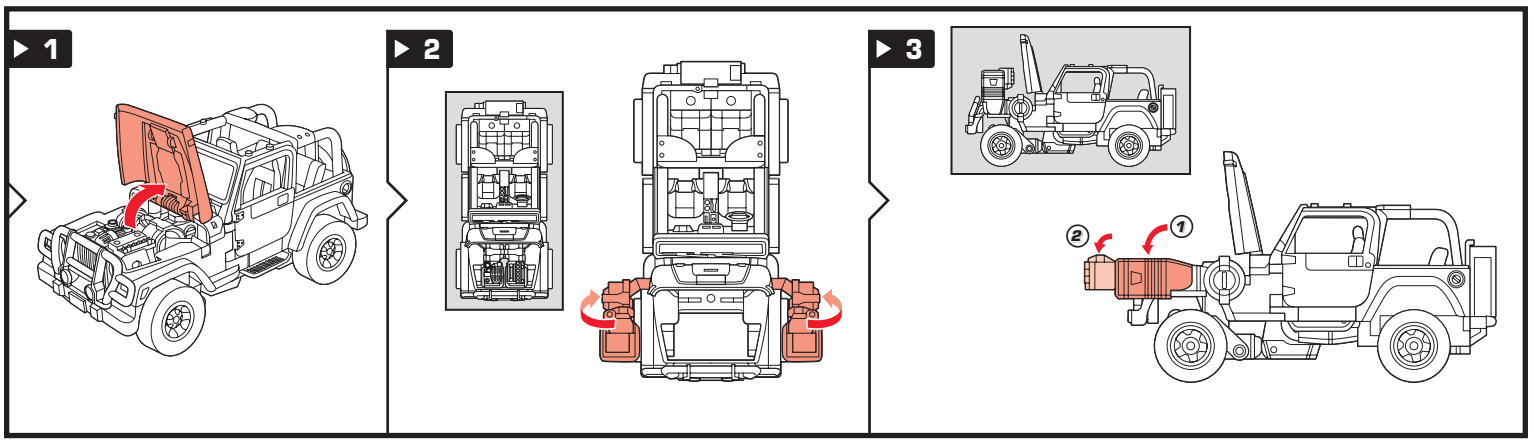

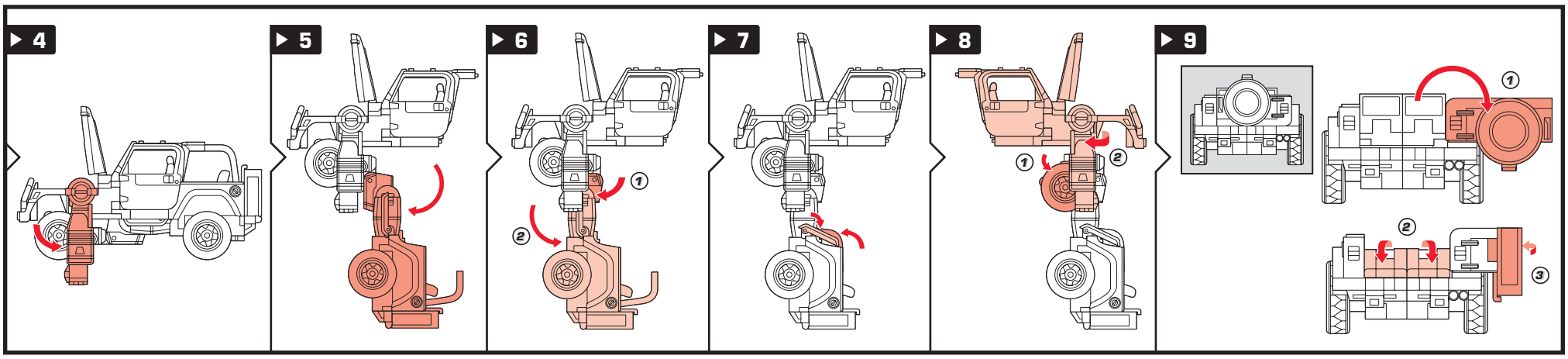

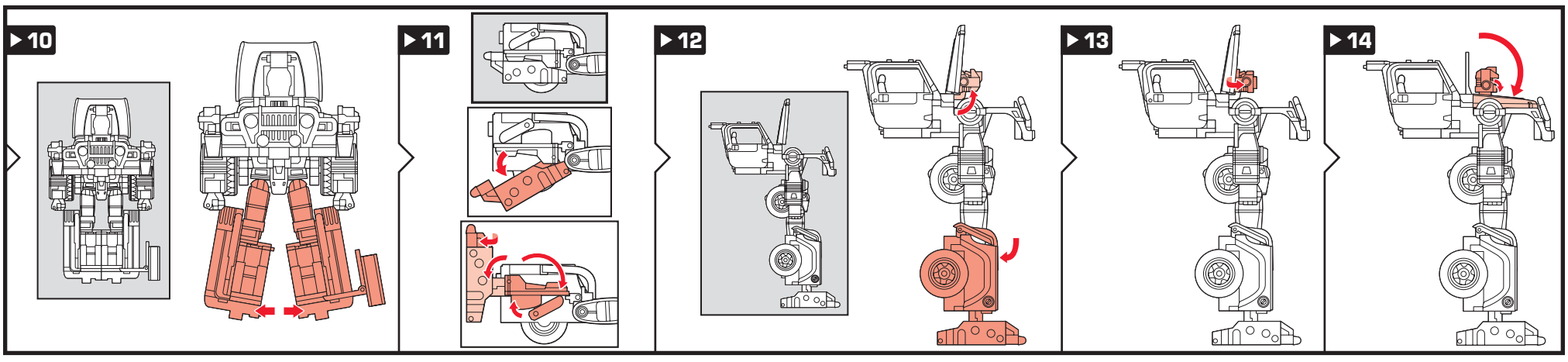

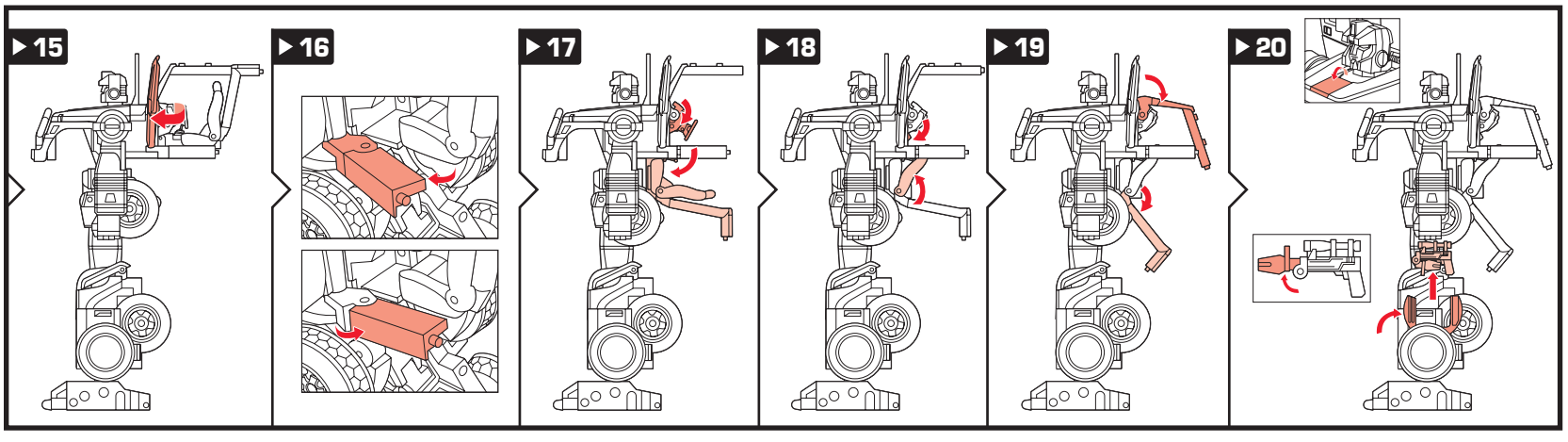

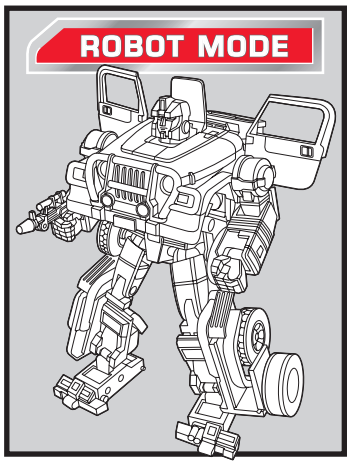

© 2005 Hasbro. All Rights Reserved.
TM & ® denote U.S. Trademarks.
Manufactured under license from Takara Co., Ltd.

Some poses may require hand support.
Product and colors may vary.

Visit Hasbro.com TRANSFORMERS.COM™

Reverse order of instructions to convert back into vehicle.