TRANSFORMERS CYBERTRON ROBOTS IN DISGUISE®

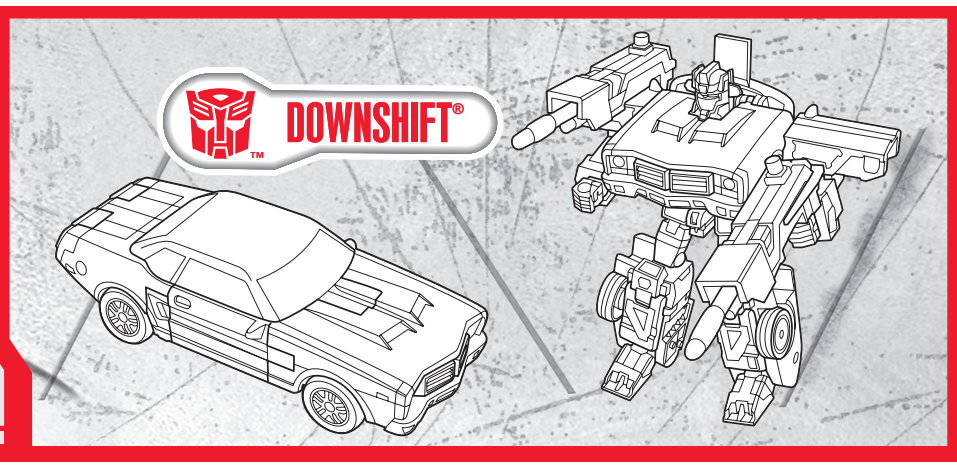

AGES 5+

80897/80286 Asst.

TRANSFORMERS.COM

NOTE: Some parts are made to detach if excessive force is applied and are designed to be reattached if separation occurs. Adult supervision may be necessary for younger children.

CHANGING TO ROBOT

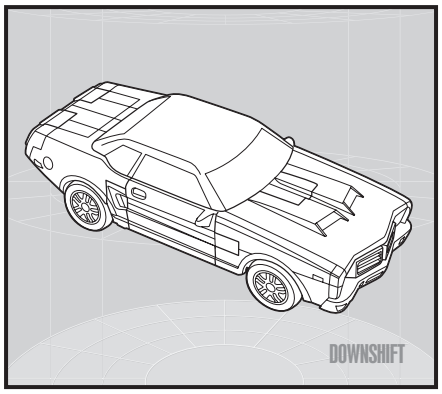

ATTACK MODE

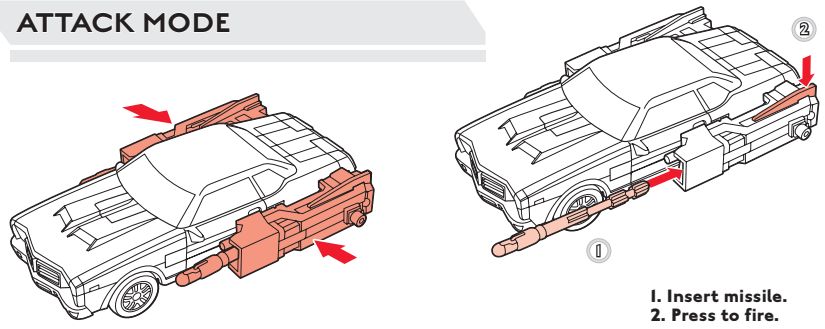

1. Insert missile.
2. Press to fire.

1

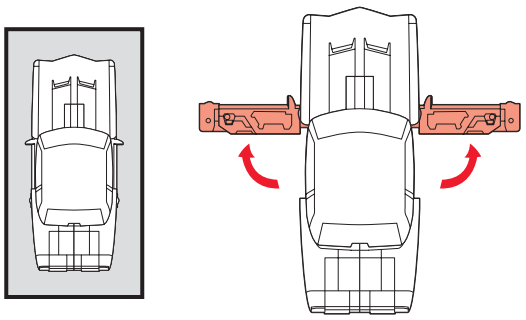

2

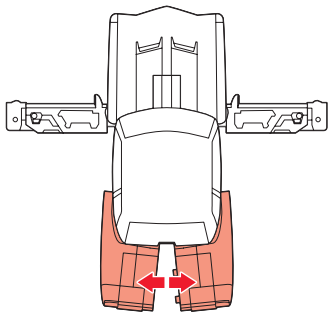

3

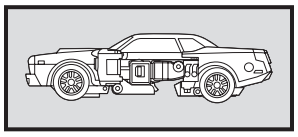

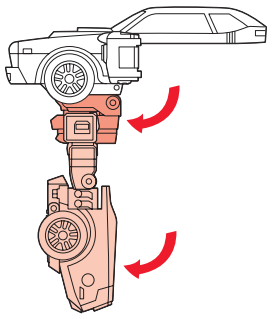

4

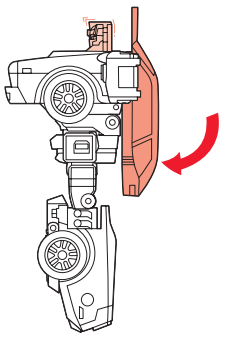

5

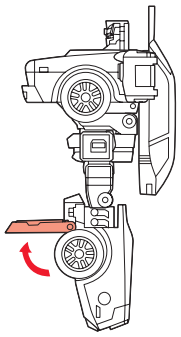

6

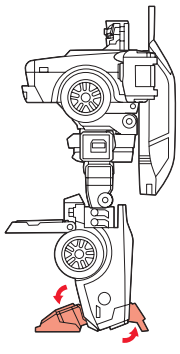

7

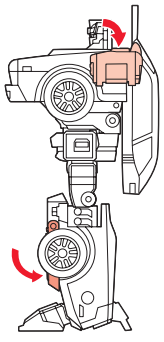

8

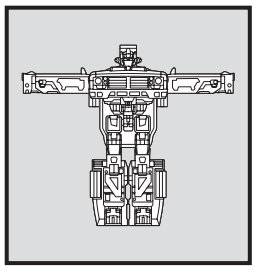

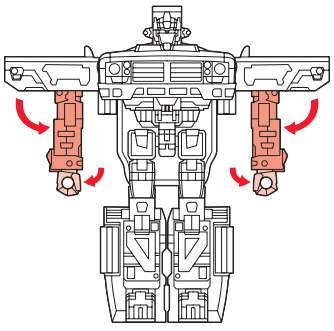

9

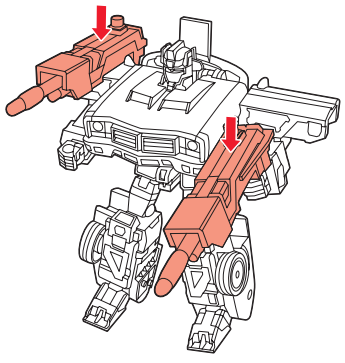

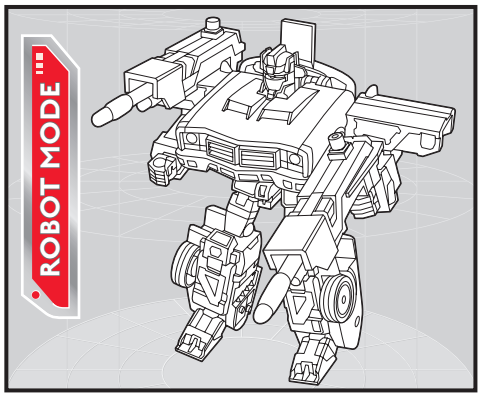

Reverse order of instructions to convert back into vehicle.

INSERT KEY TO ACTIVATE FEATURES!

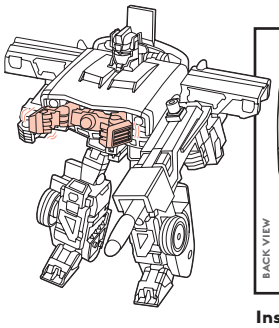

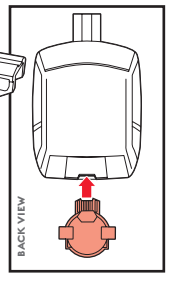

Insert CYBER PLANET KEY™ to snap out sneak-attack capture claw!

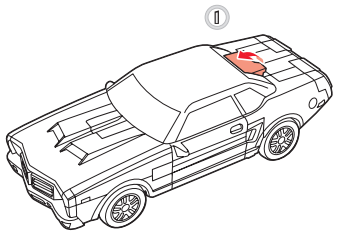

Insert CYBER PLANET KEY™ to snap out sneak-attack capture claw!

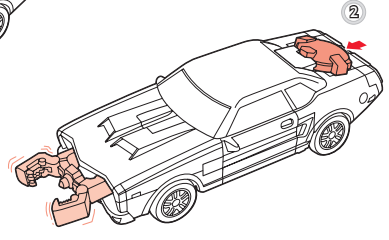

© 2005 Hasbro. All Rights Reserved.
TM & ® denote U.S. Trademarks.
Manufactured under license from Takara Co., Ltd.

Some poses may require hand support.
Product and colors may vary.

P/N 6537350000

GO TO TRANSFORMERS.COM

ENTER THE CODE FROM THE CYBER PLANET KEY FOR MORE TRANSFORMERS® INFO!

CODE